RUBINETTI

ARCHITECTURAL ELEGANCE

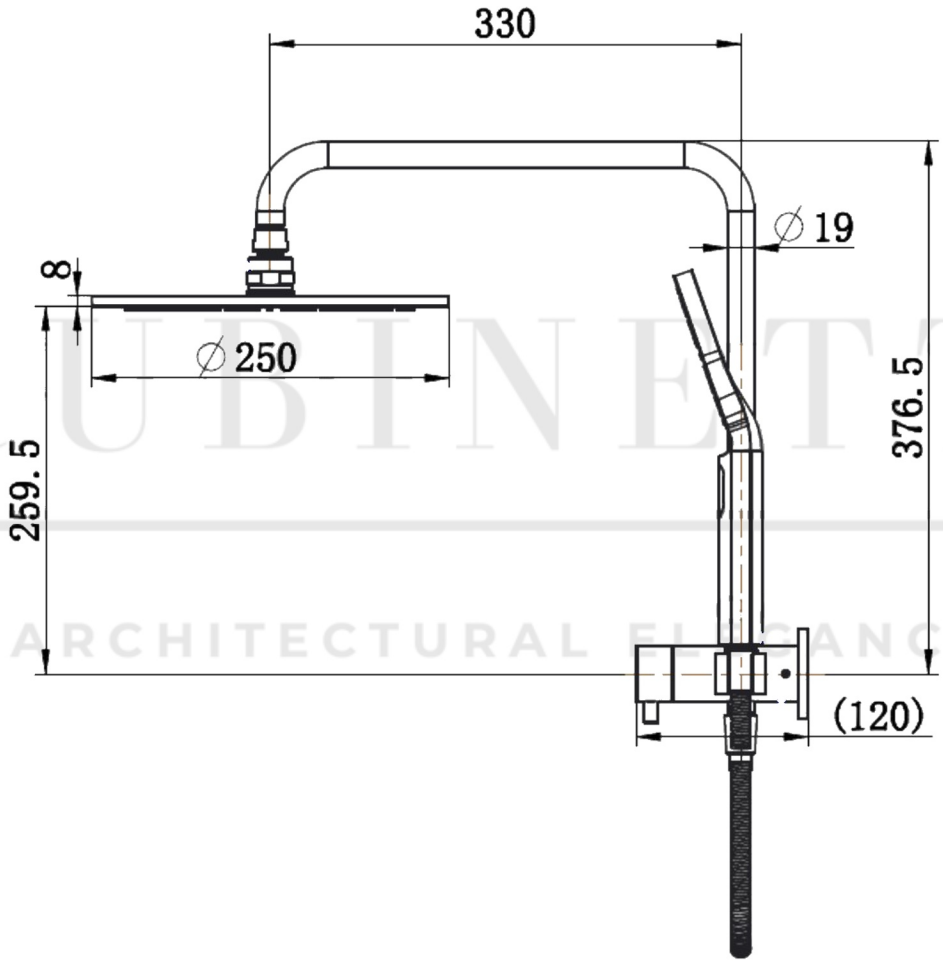

FHS04 - Fibonacci Micro Twin Shower System

Dimensions shown are nominal only. Do not commence any drilling or rough-in work until the product has been received and physically measured. All dimensions are in millimetres. Do not scale from this drawing.

Copywrite © Rubinetti 2025