RUBINETTI

ARCHITECTURAL ELEGANCE

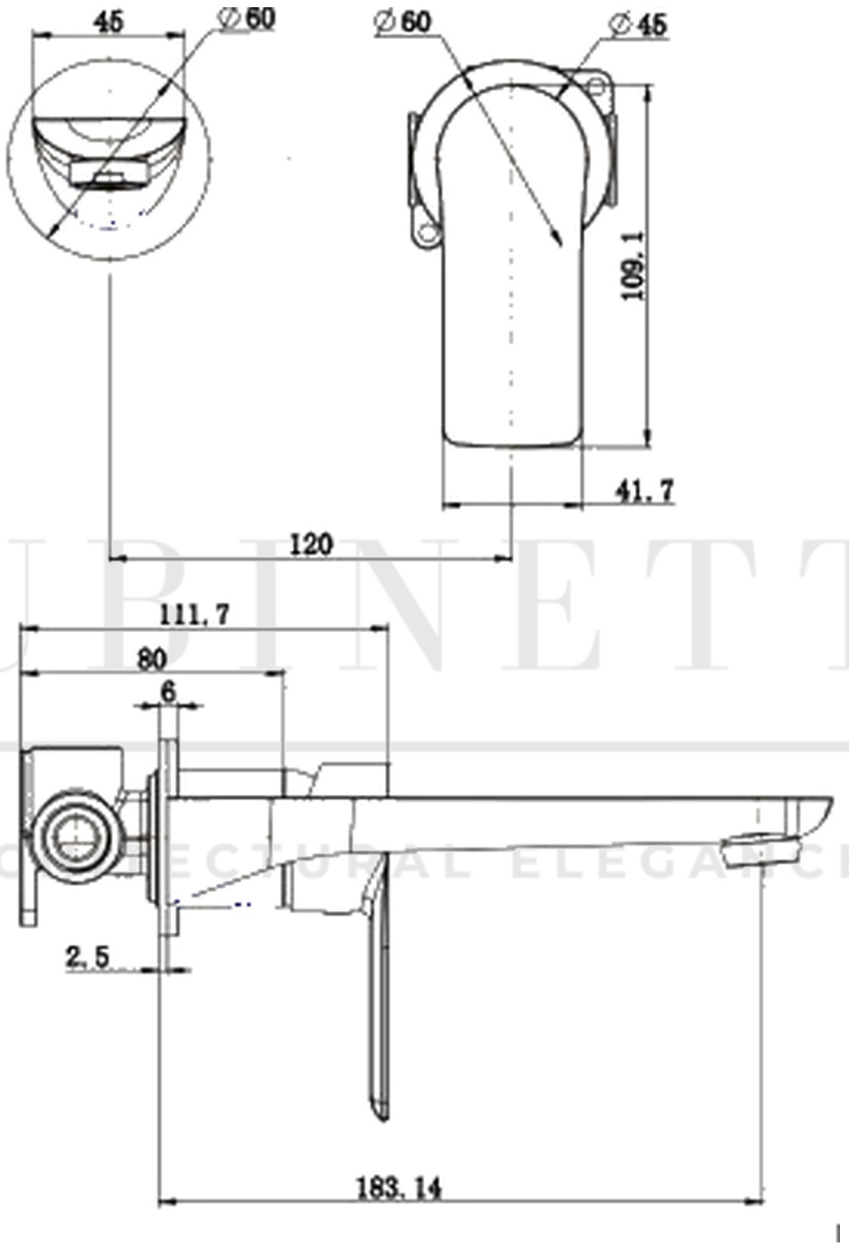

VWS01 - Valorosa Bath/Basin Wall Set

Dimensions shown are nominal only. Do not commence any drilling or rough-in work until the product has been received and physically measured. All dimensions are in millimetres. Do not scale from this drawing.

Copywrite © Rubinetti 2025